Argeton - BARRO

BARRO-aluminium support for BARRO 60x60

08 / 2017

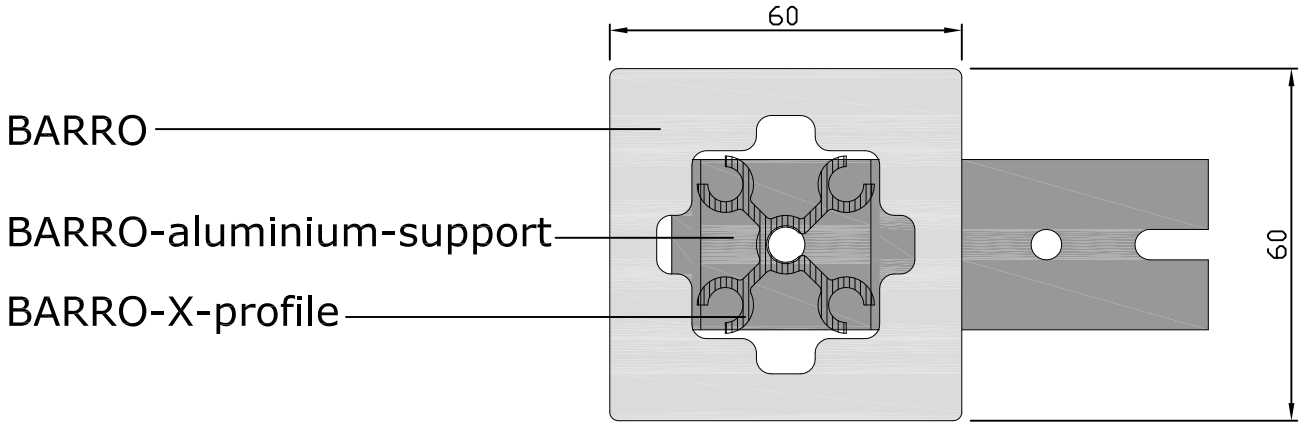

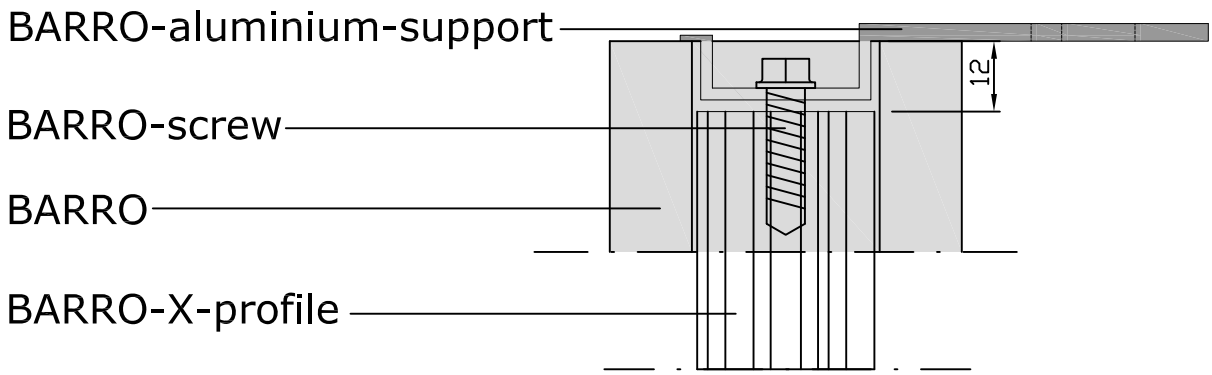

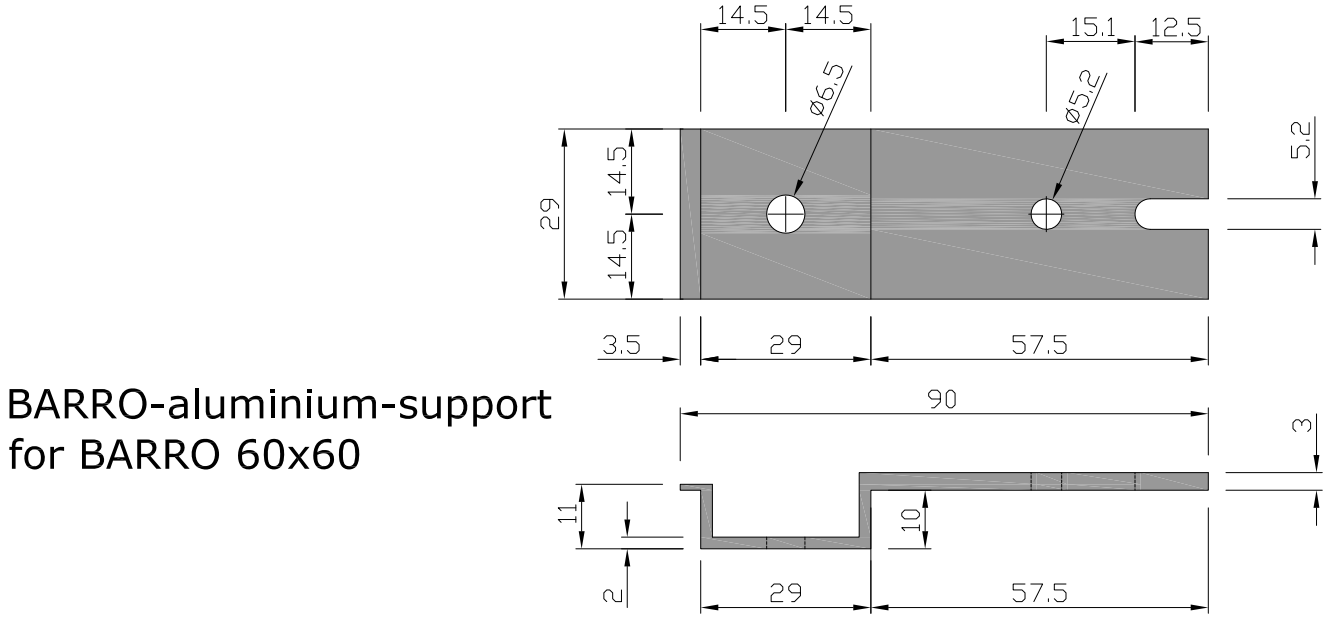

Wienerberger GmbH

Oldenburger Allee 26
30659 Hannover

Tel. ++49(0)511-61070-820
Fax ++49(0)511-61070-895

info@argeton.com
www.wienerberger.de

Argeton